Agilent Technologies

Vacuum Products Division

CE

Inverted Magnetron Pirani Gauge

FRG-700 FRG-702

Operating Instructions

Manual No. TQNa74e1
Revision 3
March 2012

Inverted Magnetron Pirani Gauge

FRG-700 FRG-702

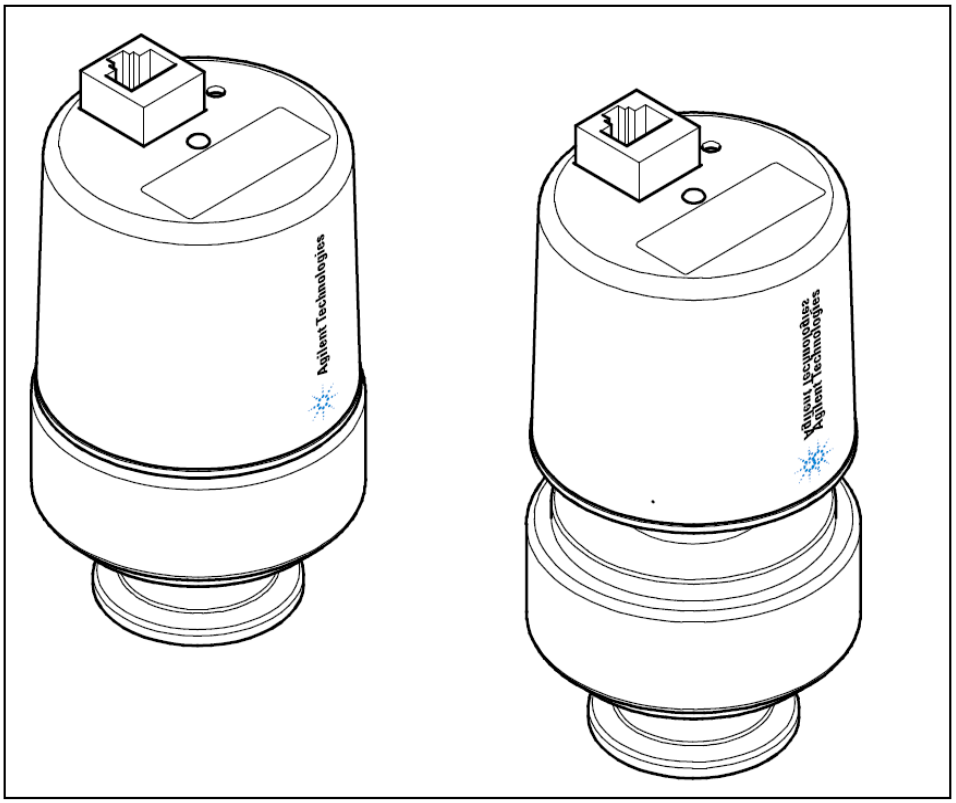

Copyright 2012
Agilent, Inc.

Contents

For cross-references within this document, the symbol (→ 🗎 XY) is used.

Product Identification

In all communications with Agilent, please specify the information given on the product nameplate. For convenient reference copy that information into the space provided below:

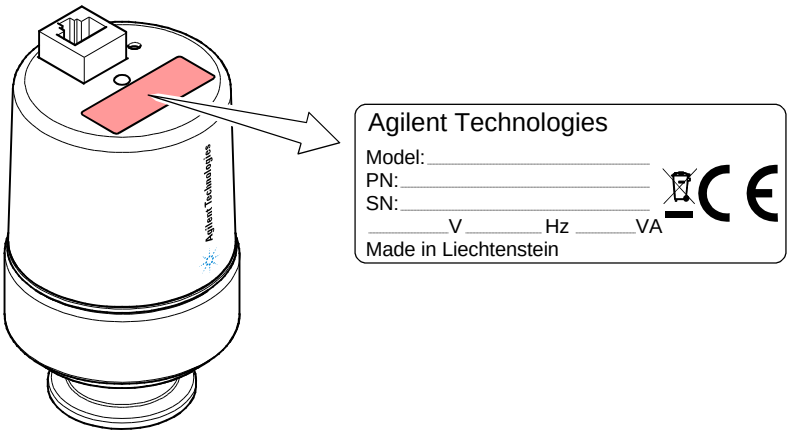

Validity

This document applies to products with part numbers:

FRG-700 (FPM sealed)		FRG-702 (all-metal)	
FRG700KF25	(DN 25 ISO-KF)	FRG702KF25	(DN 25 ISO-KF)
FRG700CF35	(DN 40 CF-C)	FRG702KF40	(DN 40 ISO-KF)
		FRG702CF35	(DN 40 CF-C)

The part number (PN) can be taken from the product nameplate.

If not indicated otherwise in the legends, the illustrations in this document correspond to the product with part number FRG700KF25. They apply to the other products by analogy.

We reserve the right to make technical changes without prior notice.

All dimensions in mm.

Intended Use

The Inverted Magnetron Pirani Gauges FRG-700 and FRG-702 have been designed for vacuum measurement in the pressure range of 5×10^{-9} … 1000 mbar.

They must not be used for measuring flammable or combustible gases in mixtures containing oxidants (e.g. atmospheric oxygen) within the explosion range.

The gauges can be operated in connection with an Agilent AGC-100 Vacuum Gauge Controller, an Agilent Turbo AG Rack Controller, or with another controller.

Functional Principle

Over the whole measuring range, the measuring signal is output as a logarithm of the pressure.

The gauge consists of two separate measurement systems (Pirani and cold cathode system) the signals of which are combined in such a way that one measurement signal is output. The Pirani measurement circuit is always on.

1 Safety

1.1 Symbols Used

DANGER

Information on preventing any kind of physical injury.

WARNING

Information on preventing extensive equipment and environmental damage.

Caution

Information on correct handling or use. Disregard can lead to malfunctions or minor equipment damage.

Notice

1.2 Personnel Qualifications

Skilled personnel

All work described in this document may only be carried out by persons who have suitable technical training and the necessary experience or who have been instructed by the end-user of the product.

1.3 General Safety Instructions

- Adhere to the applicable regulations and take the necessary precautions for the process media used.

  Consider possible reactions between the materials (→ 🗎 7) and the process media.

  Consider possible reactions (e.g. explosion) of the process media due to the heat generated by the product.
- Adhere to the applicable regulations and take the necessary precautions for all work you are going to do and consider the safety instructions in this document.
- Before beginning to work, find out whether any vacuum components are contaminated. Adhere to the relevant regulations and take the necessary precautions when handling contaminated parts.

DANGER

DANGER: magnetic fields

Strong magnetic fields can disturb electronic devices like heart pacemakers or impair their function.

Maintain a safety distance of ≥10 cm between the magnet and the heart pacemaker or prevent the influence of strong magnetic fields by antimagnetic shielding.

Communicate the safety instructions to all other users.

1.4 Liability and Warranty

Agilent assumes no liability and the warranty becomes null and void if the end-user or third parties

- disregard the information in this document
- use the product in a non-conforming manner
- make any kind of interventions (modifications, alterations etc.) on the product
- use the product with accessories not listed in the corresponding product documentation.

The end-user assumes the responsibility in conjunction with the process media used.

Gauge failures due to contamination or wear and tear as well as expendable parts (e.g. filament) are not covered by the warranty.

2 Technical Data

Measuring range (air, N_2)	5×10^{-9} … 1000 mbar
Accuracy (N_2)	≈±30% in the range 1×10^{-8} … 100 mbar
Reproducibility	≈±5% in the range 1×10^{-8} … 100 mbar
Gas type dependence	→ Appendix B

Output signal (measuring signal)	
Voltage range	0 … +10.5 V
Measuring range	1.82 … 8.6 V
Voltage vs. pressure	logarithmic, 0.6 V / decade (→ Appendix A)
Error signal	<0.5 V no supply >9.5 V Pirani measurement element defective (filament rupture)

Output impedance	2×10 Ω
Minimum loaded impedance	10 kΩ, short-circuit proof
Response time (pressure dependent)	
$p > 10^{-6}$ mbar	<10 ms
$p = 10^{-8}$ mbar	≈1000 ms

Gauge identification	85 kΩ referenced to supply common

Status	Pin 6
$p > 10^{-2}$ mbar Pirani-only mode	Low = 0 V
$p < 10^{-2}$ mbar Cold cathode not ignited Pirani-only mode	Low = 0 V
$p < 10^{-2}$ mbar Cold cathode ignited Combined Pirani / cold cathode mode	High = 15 … 30 VDC
Lamp	High voltage on (LED on)

Supply

DANGER

The gauge may only be connected to power supplies, instruments or control devices that conform to the requirements of a grounded extra-low voltage (SELV). The connection to the gauge has to be fused[1].

Supply voltage at the gauge	15.0 … 30.0 VDC (ripple ≤ 1 V_{pp})
Power consumption	≤2 W
Fuse[1]	≤1 AT

The minimum voltage of the power supply must be increased proportionally to the length of the sensor cable.

Voltage at the supply unit with maximum line length	16.0 … 30.0 VDC (ripple ≤ 1 V_{pp})

[1] Agilent controller fulfill these requirements.

Adjustment	
<HV> potentiometer	at <10^{-4} mbar
<ATM> potentiometer	at atmospheric pressure
Electrical connection	FCC68 female, 8 poles
Sensor cable	8 conductors plus shielding
Line length	≤50 m (8×0.14 mm²)
Operating voltage	≤3.3 kV
Operating current	≤500 µA
Grounding concept	→ ("Electrical Connection")
Vacuum connection-signal common	connected via 10 kΩ (max. voltage differential with respect to safety ±50 V with respect to accuracy ±10 V)
Supply common-signal common	conducted separately
Materials exposed to vacuum	
Vacuum connection	stainless steel
Measuring chamber	stainless steel
Feedthrough	ceramic
Internal seals	
FRG-700	FPM 75
FRG-702	Ag, Cu, soft solder (Sn, Ag)
Anode	Mo
Ignition aid	stainless steel
Pirani measuring tube	Ni, Au
Pirani filament	W
Mounting orientation	any
Internal volume	≈20 cm³
Pressure	≤10 bar (absolute) limited to inert gases
Temperatures	
Operation	
FRG-700	+5 … +55 °C
FRG-702	+5 … +150 °C (at flange in horizontal mounting orientation, without magnetic shielding)
Bakeout	+150 °C (without magnetic shielding and electronics unit)
Pirani filament	+120 °C
Storage	–40 °C … +65 °C
Relative humidity	≤80% at temperatures up to +31 °C decreasing to 50% at +40 °C
Use	indoors only altitude up to 2000 m
Degree of protection	IP 40

Dimensions [mm]

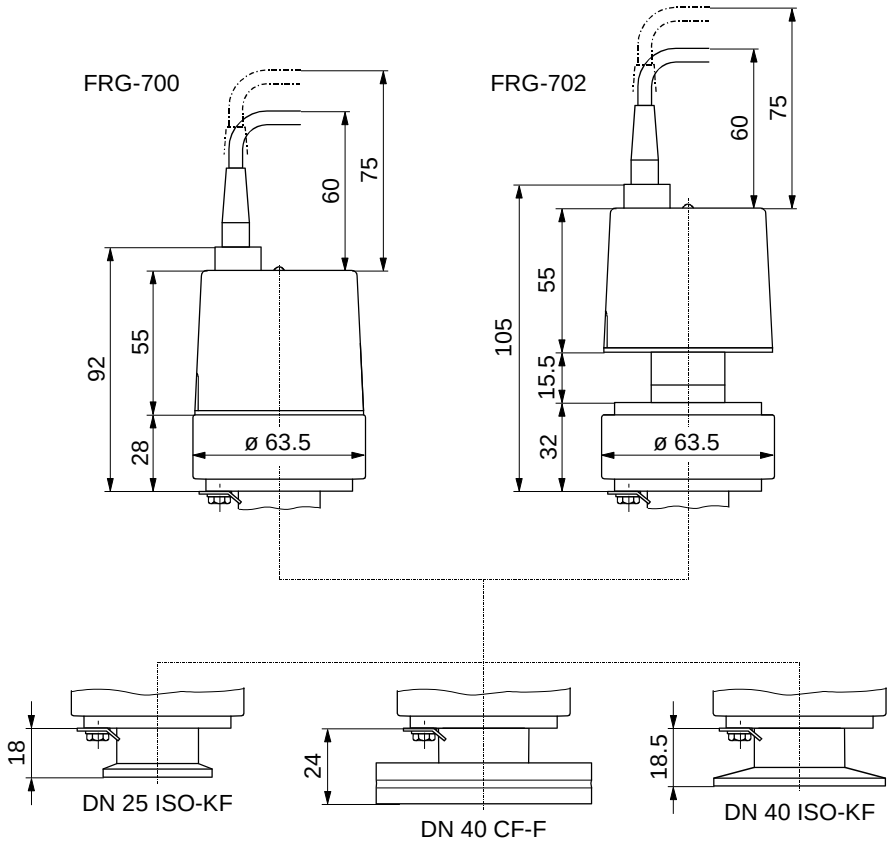

Weight

FRG700KF25	≈700 g	FRG702KF25	≈730 g
FRG700CF35	≈980 g	FRG702KF40	≈750 g
		FRG702CF35	≈1010 g

3 Installation

3.1 Vacuum Connection

DANGER

DANGER: overpressure in the vacuum system >1 bar

Injury caused by released parts and harm caused by escaping process gases can result if clamps are opened while the vacuum system is pressurized.

Do not open any clamps while the vacuum system is pressurized. Use the type of clamps which are suited to overpressure.

DANGER

DANGER: overpressure in the vacuum system >2.5 bar

KF flange connections with elastomer seals (e.g. O-rings) cannot withstand such pressures. Process media can thus leak and possibly damage your health.

Use O-rings provided with an outer centering ring.

DANGER

DANGER: protective ground

Products that are not professionally connected to ground can be extremely hazardous in the event of a fault.

The gauge must be electrically connected to the grounded vacuum chamber. The connection must conform to the requirements of protective connection according to EN 61010:

- CF connections fulfill this requirement.
- For gauges with KF connections, use a conductive metallic clamping ring.

Caution

Caution: vacuum component

Dirt and damages impair the function of the vacuum component.

When handling vacuum components, take appropriate measures to ensure cleanliness and prevent damages.

Caution

Caution: dirt sensitive area

Touching the product or parts thereof with bare hands increases the desorption rate.

Always wear clean, lint-free gloves and use clean tools when working in this area.

WARNING

WARNING: electric arcing

Helium may cause electric arcing with detrimental effects on the electronics of the product.

Before performing any tightness tests put the product out of operation and remove the electronics unit.

The gauge may be mounted in any orientation. To keep condensates and particles from getting into the measuring chamber preferably choose a horizontal to upright position and possibly use a seal with a centering ring and filter.

If adjustment should be possible after the gauge has been installed, be sure to install it so that the <HV> and <ATM> trimmer potentiometers can be accessed with a screw driver (→ 🗎 18).

When making a CF flange connection, it may be advantageous to temporarily remove the electronics and the magnet unit (→ 🗎 13).

Procedure

Remove the protective lid and connect the product to the vacuum system.

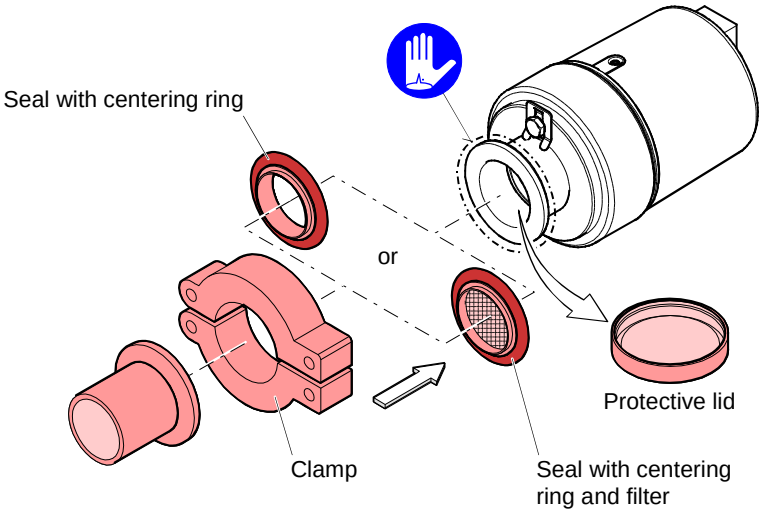

Keep the protective lid.

3.1.1 Removing the Magnet Unit (Only for Gauges With CF Flanges)

Tools required

- Allen wrench AF 1.5
- Open-end wrench AF 7

Procedure

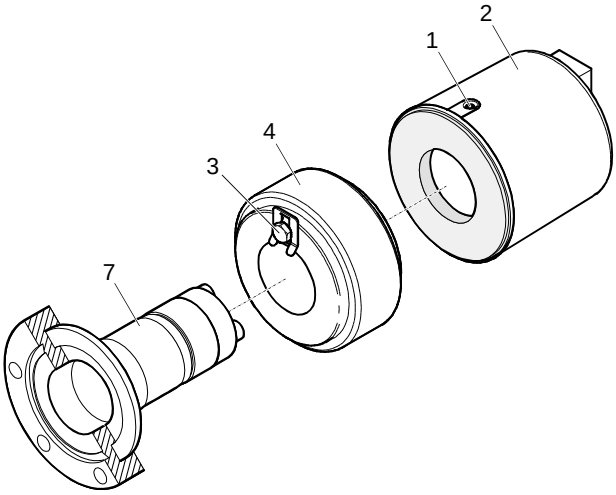

a) Unfasten the hexagon socket set screw (1) on the electronics unit (2).

b) Remove the electronics unit **without twisting it**.

c) Unfasten the hexagon head screw (3) on the magnet unit (4) and remove the magnet unit.

The magnetic force and the tendency to tilt make it difficult to separate the magnet unit and the measuring chamber (7).

d) Make the flange connection between the gauge and the vacuum system.

e) Remount the magnet unit and lock it with the hexagon head screw (3).

f) Carefully mount the electronics unit (2). (Make sure the pin of the Pirani element is properly plugged into the corresponding hole of the electronics unit.)

g) Push the electronics unit up to the mechanical stop and lock it with the hexagon socket set screw (1).

3.2 Electrical Connection

Precondition

Make sure the vacuum connection is properly made (→ 🗎 11).

3.2.1 Use With an Agilent Controller

Connect the sensor cable to the gauge and the controller.

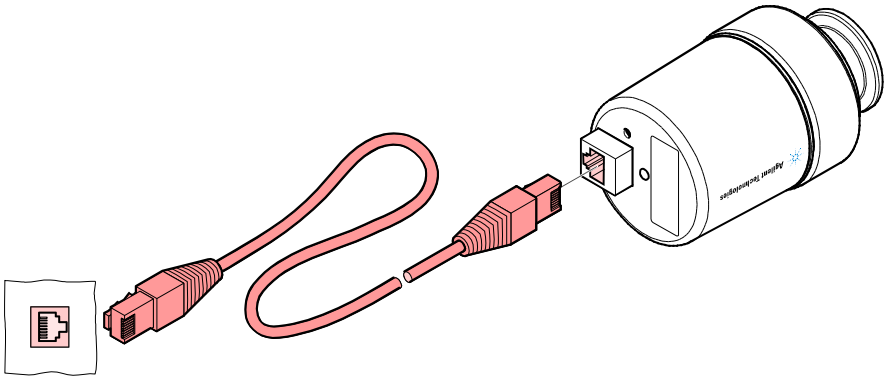

3.2.2 Use With Another Control Device

❶ Make a sensor cable according to the diagram.

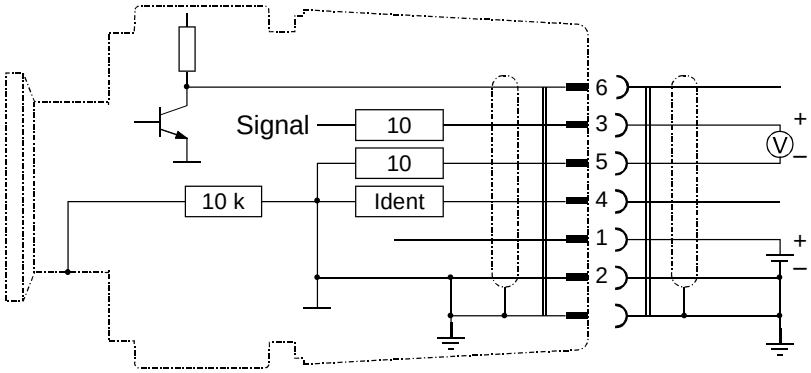

Electrical connection

Pin 1	Supply (15 … 30 VDC)
Pin 2	Supply common
Pin 3	Signal output (measuring signal)
Pin 4	Identification
Pin 5	Signal common
Pin 6	Status
Pin 7, 8	n.c.

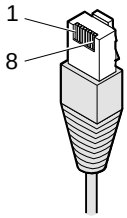

8 poles FCC-68

❷ Connect the sensor cable to the gauge and the controller.

4 Operation

As soon as the required supply voltage is applied, the measuring signal is available between pins 3 and 5. (→ Appendix for the relationship between the measuring signal and the pressure).

Allow for a stabilizing time of approx. 10 min. Once the gauge has been switched on, permanently leave it on irrespective of the pressure.

4.1 Measurement Principle, Measuring Behavior

The gauge consists of two separate measuring systems (Pirani and cold cathode system according to the inverted magnetron principle). They are combined in such a way that for the user, they behave like one measuring system.

The optimum measuring configuration for the particular pressure range, in which measurement is performed, is used:

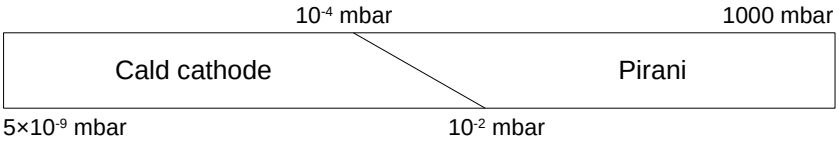

- The Pirani measuring circuit is always on
- The cold cathode measuring circuit is controlled by the Pirani circuit and is activated only at pressures $<1\times10^{-2}$ mbar

The identification output (pin 6) indicates the current status of the gauge:

Pressure	Lamp on the gauge	Operating mode	Pin 6
$p > 1\times10^{-2}$ mbar		Pirani-only mode	Low = 0 V
$p < 1\times10^{-2}$ mbar		Cold cathode not ignited Pirani-only mode	Low = 0 V
$p < 1\times10^{-2}$ mbar		Cold cathode ignited Combined Pirani / cold cathode mode	High = 15 … 30 VDC

As long as the cold cathode measuring circuit has not ignited, the measuring value of the Pirani is output as measuring signal.

Gas type dependence

The measuring signal depends on the type of gas being measured. The curves are accurate for dry air, O_2, CO and N_2. They can be mathematically converted for other gases (→ Appendix B).

If you are using an Agilent controller, you can enter a calibration factor to correct the pressure reading (→ 🕮 of that controller).

Ignition delay

When cold cathode measuring systems are activated, an ignition delay occurs. The delay time increases at low pressures and is typically:

10^{-5} mbar	≈1 second
10^{-7} mbar	≈20 seconds
5×10^{-9} mbar	≈2 minutes

As long as the cold cathode measuring circuit has not yet ignited, the measured value of the Pirani is output as measuring signal. The status output (pin 6, low) indicates the Pirani-only mode.

If the gauge is activated at a pressure $p < 3\times10^{-9}$, the gauge cannot recognize whether the cold cathode system has ignited.

Once flanged on, permanently leave the gauge in the operating mode irrespective of the pressure range. Like this, the ignition delay of the cold cathode measuring circuit is always negligible (<1 s), and thermal stabilizing effects are minimized.

Contamination

Gauge failures due to contamination or wear and tear as well as expendable parts (e.g. filament) are not covered by the warranty.

Gauge contamination is influenced by the process media used as well as by any present or new contaminants and their respective partial pressures. Continuous operation in the range of 10^{-4} mbar … 10^{-2} mbar can cause severe contamination as well as reduced up-time and maintenance cycles. With constantly low pressures ($p < 1\times10^{-6}$ mbar), the gauge can be operated for more than one year without cleaning (cleaning the gauge → 🗎 20, 23).

Contamination of the gauge generally causes a deviation of the measured values:

- In the high pressure range (1×10^{-3} mbar … 0.1 mbar), the pressure reading is too high (contamination of the Pirani element). Readjustment of the Pirani measuring system → 🗎 18.
- In the low pressure range ($p < 1\times10^{-3}$ mbar), the pressure reading is usually too low (contamination of the cold cathode system). In case of severe contamination, instabilities can occur (layers of the measuring chamber peel off). Contamination due to insulation layers can even lead to a complete failure of the discharge ("Underrange" is displayed).

Contamination can to a certain extent be reduced by:

- geometric protection measures (e.g. screenings, elbows) for particles that spread rectilinearly
- mounting the flange of the gauge at a place where the partial pressure of the pollutants is particularly low.

Special precautions are required for vapors deposited under plasma (of the cold cathode measuring system). It may even be necessary to temporarily switch of the gauge while such vapors occur.

5 Deinstallation

DANGER

DANGER: contaminated parts

Contaminated parts can be detrimental to health and environment.

Before beginning to work, find out whether any parts are contaminated. Adhere to the relevant regulations and take the necessary precautions when handling contaminated parts.

Caution

Caution: vacuum component

Dirt and damages impair the function of the vacuum component.

When handling vacuum components, take appropriate measures to ensure cleanliness and prevent damages.

Caution

Caution: dirt sensitive area

Touching the product or parts thereof with bare hands increases the desorption rate.

Always wear clean, lint-free gloves and use clean tools when working in this area.

Procedure

1. Vent the vacuum system.
2. Put the gauge out off operation and unplug the sensor cable.
3. Remove the gauge from the vacuum system and install the protective lid.

When deinstalling the CF flange connection, it may be advantageous to temporarily remove the magnet unit (→ 🗎 13).

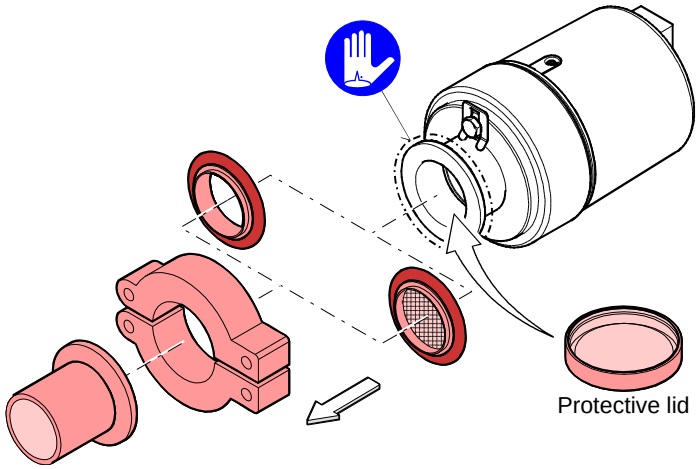

6 Maintenance

Gauge failures due to contamination or wear and tear as well as expendable parts (e.g. filament) are not covered by the warranty.

DANGER

DANGER: contaminated parts

Contaminated parts can be detrimental to health and environment.

Before beginning to work, find out whether any parts are contaminated. Adhere to the relevant regulations and take the necessary precautions when handling contaminated parts.

Caution

Caution: vacuum component

Dirt and damages impair the function of the vacuum component.

When handling vacuum components, take appropriate measures to ensure cleanliness and prevent damages.

Caution

Caution: dirt sensitive area

Touching the product or parts thereof with bare hands increases the desorption rate.

Always wear clean, lint-free gloves and use clean tools when working in this area.

6.1 Adjusting the Gauge

The gauge is factory-calibrated. If used under different climatic conditions, through extreme temperatures, aging or contamination, and after exchanging the sensor, the characteristic curve can be offset and readjustment may become necessary

The cold cathode measuring circuit, which is dominant for low pressures ($<1\times10^{-3}$ mbar), is factory-calibrated and cannot be adjusted. By way of contrast, the Pirani measuring circuit can be adjusted. Any adjustment has a negligible effect on the pressure range between approx. 10^{-2} mbar and 10^{2} mbar.

Tools required

- Screw driver 1.5 mm
- Cylindrical pin ø≈3 mm

Procedure

1. If you are using a seal with centering ring and filter, check that they are clean or replace them if necessary (→ 17).
2. Put the gauge into operation (if possible, in the position, in which it will be used later on).
3. Evacuate the vacuum system to $p \ll 10^{-4}$ mbar, and then wait 10 minutes.
4. Turn the nameplate counter-clockwise until the mechanical stop is reached.

❺

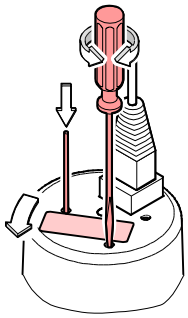

While depressing the pin with the cylindrical pin, adjust the <HV> potentiometer …

… to 4.20 V or … to 5×10^{-4} mbar.

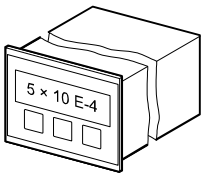

After that, turn the potentiometer counter-clockwise by1/3 of a turn.

❻ Vent the gauge with air or nitrogen to atmospheric pressure, and wait at least 10 minutes.

❼ Turn the nameplate clockwise until the mechanical stop is reached.

❽

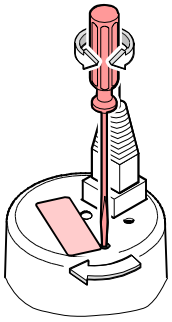

Using the 1.5 mm screwdriver, adjust the <ATM> potentiometer …

… to 8.60 V or … to 1×10^{3} mbar.

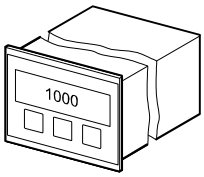

❾ Turn the nameplate back to its original position (it catches).

6.2 Cleaning FRG-700, Replacing Parts

DANGER

DANGER: cleaning agents

Cleaning agents can be detrimental to health and environment.

Adhere to the relevant regulations and take the necessary precautions when handling cleaning agents and disposing of them. Consider possible reactions with the product materials (→ 🗎 9).

We recommend replacing the Pirani element when cleaning the gauge.

Tools / material required

- Allen wrench AF 1.5
- Allen wrench AF 3
- Open-end wrench 7.0 mm
- Pliers for circlip
- Polishing cloth (400 grain) or Scotch-Brite
- Tweezers
- Cleaning alcohol
- Mounting tool for ignition aid
- Ignition aid
- Pirani element (13) incl. FPM seal (13a)
- FPM seal (11) for anode feedthrough

6.2.1 Disassembling FRG-700

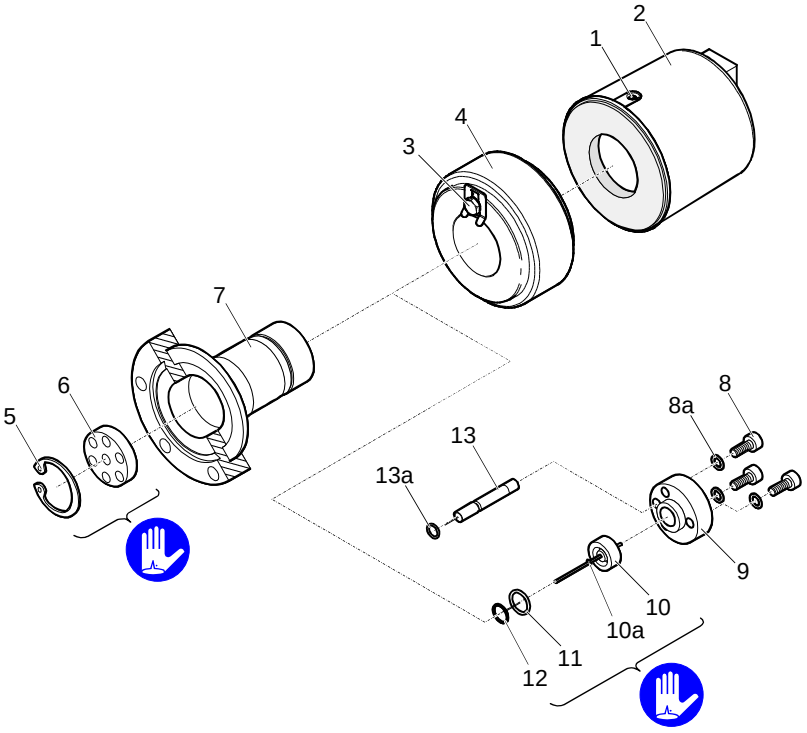

1. Remove the gauge from the vacuum system (→ 🗎 17).
2. Unfasten the hexagon socket set screw (1) on the electronics unit (2).
3. Remove the electronics unit **without twisting it**.

   The cover of the electronics unit cannot be removed.

❹ Unfasten the hexagon head screw (3) on the magnet unit (4) and remove the magnet unit.

☞ The magnetic force and the tendency to tilt make it difficult to separate the magnet unit and the measuring chamber (7).

❺ Remove the circlip (5) and the polarity insert (6) from the measuring chamber

❻ Remove the three hexagon socket screws (8) incl. lock washers (8a) on the back of the measuring chamber.

❼ Carefully remove the following parts in this order (without exerting stress on the Pirani element (13)): pressure piece (9), complete anode (10), FPM seal (11) incl. support ring (12), Pirani element (13) incl. FPM seal (13a).

The parts can now be cleaned or replaced individually.

6.2.2 Cleaning FRG-700

Cleaning the measuring chamber and the polarity insert

❶ Using a polishing cloth rub the inside walls of the measuring chamber and the polarity insert to a bright finish.

☞ The sealing surfaces must only be worked concentrically.

❷ Rinse the measuring chamber and the polarity insert with cleaning alcohol.

❸ Allow both to dry.

Cleaning or replacing the anode

❶ Remove the used ignition aid (10a) with tweezers.

❷ Using a polishing cloth rub the anode pin to a bright finish.

☞ Do not bend the anode. Do not carry out mechanical work on the ceramic part.

❸ Rinse the anode with cleaning alcohol.

❹ Allow the anode to dry.

❺ Insert a new ignition aid (10a) into the mounting tool.

❻ Carefully press the anode (clean or new) centered and parallel to the tool axis into the ignition aid and insert it to a depth of approx. 15 mm. The final positioning is established after the anode is installed.

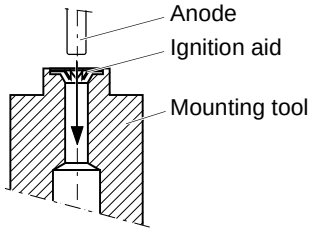

Cleaning the Pirani element

❶ Remove the FPM seal (13a) from the Pirani element (13).

❷ Fill the Pirani measuring tube with cleaning alcohol and let it work.

❸ Pour the alcohol out of the tube.

❹ Dry the tube (e.g. with a blow dryer <150 °C).

❺ Slide a new FPM seal over the Pirani element and insert it into the corresponding groove.

❻ Reinstall the Pirani element (→ 🗎 22).

Replacing the Pirani element

☞ If it is severely contaminated or defective.

❶ Slide a new FPM seal (13a) over the Pirani element (13) and insert it into the corresponding groove.

❷ Mount the Pirani element (→ 🗎 22).

6.2.3 Reassembling FRG-700

(→ figure 🗎 20)

❶ Insert the FPM seal (11) with the support ring (12) centered into the measuring chamber (7). The sealing surface, seal, and ceramic part must be clean.

❷ Carefully insert the anode (10) incl. ignition aid (10a) into the measuring chamber.

❸ Insert the Pirani element (13) with the FPM seal (13a) slid over it into the corresponding bore hole.

❹ Carefully place the pressure piece (9) on the measuring chamber and tighten them with the three hexagon socket screws (8) incl. lock washers (8a) uniformly until the stop position is reached.

❺ Position the ignition aid (10a) by pushing the mounting tool over the anode pin until the mechanical stop is reached.

❻ Blow the particles in the measuring chamber with dry nitrogen (be careful to hold the measuring chamber with the flange pointing downwards).

❼ Slide the polarity insert (6) into the measuring chamber until the mechanical stop is reached.

❽ Place the circlip (5) snugly fitting on the polarity insert.

☞ Visually check that the anode pin is centered over the middle hole of the polarity insert (max. eccentricity = 0.5 mm).

9. If possible perform a leak test (leak rate <10^{-9} mbar l/s).

> **WARNING**
>
> WARNING: electric arcing
>
> Helium may cause electric arcing with detrimental effects on the electronics of the product.
>
> Before performing any tightness tests put the product out of operation and remove the electronics unit.

10. Mount the magnet unit (4) and lock it with the screw (3).
11. Carefully mount the electronics unit (2). (Make sure the pin of the Pirani element is properly plugged into the corresponding hole of the electronics unit.)
12. Push the electronics unit up to the mechanical stop and lock it with the hexagon socket set screw (1).
13. Adjust the gauge (→ 🗎 18).

6.3 Cleaning FRG-702, Replacing Parts

> **DANGER**
>
> DANGER: cleaning agents
>
> Cleaning agents can be detrimental to health and environment.
>
> Adhere to the relevant regulations and take the necessary precautions when handling cleaning agents and disposing of them. Consider possible reactions with the product materials (→ 🗎 9).

For cleaning the measuring chamber, the Pirani element must be removed and replaced.

Tools / material required

- Allen wrench AF 1.5
- Allen wrench AF 3
- Open-end wrench AF 6
- Open-end wrench AF 7
- Pliers for circlip
- Polishing cloth (400 grain) or Scotch-Brite
- Tweezers
- Cleaning alcohol
- Mounting tool for ignition aid
- Ignition aid
- Metal seal (11) for anode feedthrough
- Pirani element (13) incl. set of seals (13a, 13b)

6.3.1 Disassembling FRG-702

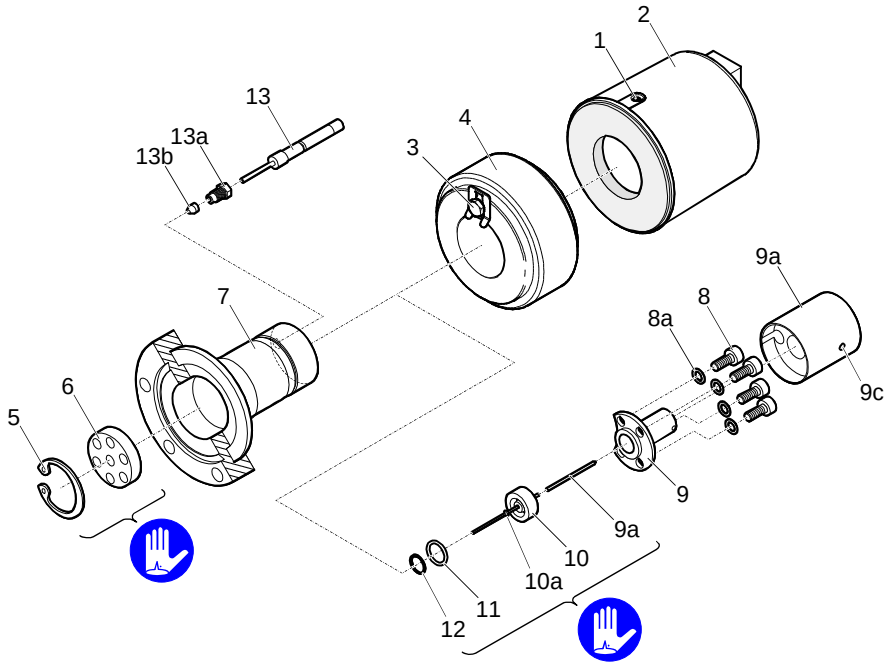

❶ Remove the gauge from the vacuum system (→ 🗎 17).

❷ Unfasten the hexagon socket set screw (1) on the electronics unit (2).

❸ Remove the electronics unit **without twisting it**.

☞ The cover of the electronics unit cannot be removed.

❹ Unfasten the hexagon head screw (3) on the magnet unit (4) and remove the magnet unit.

☞ The magnetic force and the tendency to tilt make it more difficult to separate the magnet unit and the measuring chamber (7).

❺ Remove the circlip (5) and the polarity insert (6) from the measuring chamber.

❻ Unfasten the hexagon socket set screw (9c) and remove the insulator (9b) **without twisting it**.

❼ Remove the four hexagon socket screws (8) incl. lock washers (8a) on the back of the measuring chamber.

❽ Carefully remove the following parts in this order (without exerting stress on the Pirani element (13)): pressure piece (9), anode extension piece (9a), complete anode (10), metal seal (11) incl. centering ring (12).

❾ Unfasten the screw fitting (13a) of the Pirani element and remove Pirani element together with the copper seal (13b).

The parts can now be cleaned or replaced individually.

6.3.2 Cleaning FRG-702

Cleaning the measuring chamber and the polarity insert

❶ Using a polishing cloth rub the inside walls of the measuring chamber and the polarity insert to a bright finish.

☞ The sealing surfaces must only be worked concentrically.

❷ Rinse the measuring chamber and the polarity insert with cleaning alcohol.

❸ Allow both to dry.

Cleaning or replacing the anode

❶ Remove the used ignition aid (10a) with pliers.

❷ Using a polishing cloth rub the anode pin to a bright finish.

☞ Do not bend the anode. Do not carry out mechanical work on the ceramic part.

❸ Rinse the anode with cleaning alcohol.

❹ Allow the anode to dry.

❺ Insert a new ignition aid (10a) into the mounting tool.

❻ Carefully press the anode (clean or new) centered and parallel to the tool axis into the ignition aid and insert it to a depth of approx. 15 mm. The final positioning is established after the anode is installed.

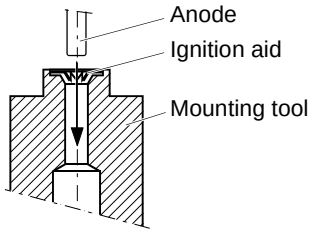

Replacing the Pirani element

❶ Slide the screw fitting (13a) and the copper seal (13b) over the Pirani element (13).

❷ Mount the Pirani element (→ 🗎 26).

6.3.3 Reassembling FRG-702

(→ figure 🗎 24)

1. Insert the Pirani element (13) with the screw fitting (13a) and copper seal (13b) slid over it into the corresponding conic bore hole (7) of the measuring chamber.
2. Tighten the screw fitting (13a) with your fingers while slightly pushing the Pirani element against the mechanical stop. Then tighten the screw fitting by one turn with the open-end wrench.
3. Insert a new metal seal (11) incl. the centering ring (12) centered into the measuring chamber (7).
4. Carefully insert the anode (10) with the ignition aid (10a) and extension piece (9a) slid onto it into the measuring chamber.
5. Carefully place the pressure piece (9) on the measuring chamber.
6. Insert the four hexagon socket screws (8) incl. lock washers (8a) and tighten them uniformly until the mechanical stop is reached.
7. Carefully slide the insulator (9b) onto the pressure piece (9) and lock it with the hexagon socket set screw (9c).
8. Position the ignition aid (10a) by pushing the mounting tool over the anode pin until the mechanical stop is reached.
9. Blow the particles in the measuring chamber with dry nitrogen (be careful to hold the measuring chamber with the flange pointing downwards).
10. Slide the polarity insert (6) into the measuring chamber until the mechanical stop is reached.
11. Place the circlip (5) snugly fitting on the polarity insert.

    ☞ Visually check that the anode pin is centered over the middle hole of the polarity insert (max. eccentricity = 0.5 mm).

12. If possible perform a leak test (leak rate <10^{-9} mbar l/s). If necessary slightly retighten the screw fitting (13a).

    WARNING

    WARNING: electric arcing

    Helium may cause electric arcing with detrimental effects on the electronics of the product.

    Before performing any tightness tests put the product out of operation and remove the electronics unit.

13. Mount the magnet unit (4) and lock it with the hexagon head screw (3).
14. Carefully mount the electronics unit (2). (Make sure the pin of the Pirani element is properly plugged into the corresponding hole of the electronics unit.)
15. Push the electronics unit up to the mechanical stop and lock it with the hexagon socket set screw (1).
16. Adjust the gauge (→ 🗎 18).

6.4 Troubleshooting

Problem	Possible cause	Remedy
Measuring signal continually < 0.5 V "Error low".	No supply voltage.	Turn on the power supply.
Measuring signal continually > 9.5 V "Error high".	Pirani measurement element defective (filament rupture).	Replace the Pirani element (FRG-700 → 🗎 22) (FRG-702 → 🗎 25).
	Electronics unit not correctly mounted.	Mount the electronics unit correctly (FRG-700 → 🗎 22) (FRG-702 → 🗎 26).
The green lamp is ON and the status output indicates Pirani-only mode (measuring signal continually > 4.0 V)	The cold cathode discharge has not ignited.	Wait until the gas discharge ignites (in case of contamination with insulation layers, the cold cathode may completely fail to ignite). (Cleaning FRG-700 → 🗎 20 FRG-702 → 🗎 23).
	The FRG has only been activated with $p < 3\times10^{-9}$ mbar.	Slightly increase the pressure.
Measuring signal continually > 5 V or display > 10^{-3} mbar although vacuum pressure is OK.	Pirani measurement circuit not adjusted, e.g. due to severe contamination.	Readjust the Pirani measurement circuit (→ 🗎 18). If adjustment is impossible, replace the Pirani element.
	Measurement of heavy gases.	Convert with the corresponding formula (→ 🗎 31).
	Severe outgassing in the cold cathode measuring chamber.	Clean the measuring chamber.
Measuring signal unstable.	Gauge contaminated.	Clean the gauge (FRG-700 → 🗎 20) (FRG-702 → 🗎 23).

7 Spare Parts

When ordering spare parts, always mention:

- all information on the product nameplate
- description and ordering number according to the spare parts list

FRG-700

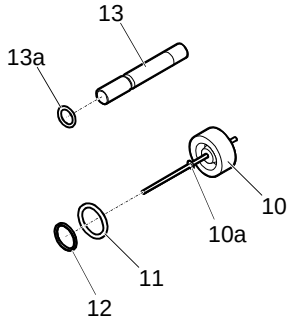

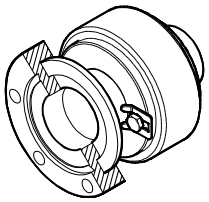

Pos.	Description	Ordering number
	Maintenance kit, consisting of:	FRG700MAINT
12	1× support ring	
13a	1× O-ring FPM ø3.69×1.78	
11	1× O-ring FPM ø10.82× 1.78	
10a	3× ignition aid	
	Repair kit, consisting of:	FRG700REPR
13	1× Pirani element	
12	1× support ring	
13a	1× O-ring FPM ø3.69×1.78	
11	1× O-ring FPM ø10.82×1.78	
10a	3× ignition aid	
10	1× anode, complete	
	Set of ignition aids, comprising:	FRG700IGN
10a	10× ignition aid	
	Mounting tool for ignition aid	FRG700IGNT
	Measuring system	
	DN 25 ISO-KF flange	FRG700MEAS25
	DN 40 CF-F flange	FRG700MEAS40

FRG-702

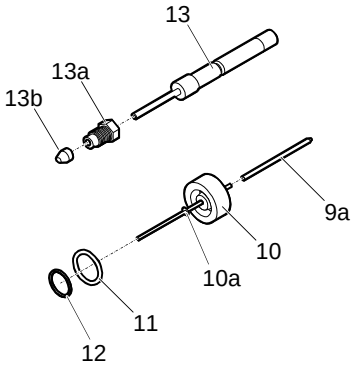

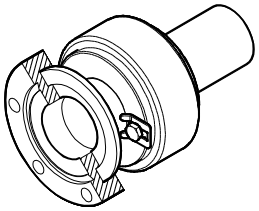

Pos.	Description	Ordering number
	Maintenance kit, consisting of:	FRG702MAINT
11	1× seal HN 100 (9×1.6)	
12	1× centering ring	
10a	3× ignition aid	
	1× washer (not used with FRG-702)	
	Repair kit, consisting of:	FRG702REPR
13	1× Pirani element with glass feedthrough	
13a	1× screw fitting	
13b	1× copper seal	
9a	1× anode extension piece	
10	1× anode, complete	
10a	3× ignition aid	
11	1× seal HN 100 (9×1.6)	
12	1× centering ring	
	Set of ignition aids, consisting of:	FRG700IGN
10a	10× ignition aid	
	Mounting tool for ignition aid	FRG700IGNT
	Measurement system, complete	
	DN 25 ISO-KF flange	FRG702MEAS25
	DN 40 CF-F flange	FRG702MEAS40

8 Returning the Product

WARNING

WARNING: forwarding contaminated products

Contaminated products (e.g. radioactive, toxic, caustic or biological hazard) can be detrimental to health and environment.

Products returned to Agilent should preferably be free of harmful substances. Adhere to the forwarding regulations of all involved countries and forwarding companies and enclose a duly completed declaration of contamination.

Products that are not clearly declared as "free of harmful substances" are decontaminated at the expense of the customer.

Products not accompanied by a duly completed declaration of contamination are returned to the sender at his own expense.

9 Disposal

DANGER

DANGER: contaminated parts

Contaminated parts can be detrimental to health and environment.

Before beginning to work, find out whether any parts are contaminated. Adhere to the relevant regulations and take the necessary precautions when handling contaminated parts.

WARNING

WARNING: substances detrimental to the environment

Products or parts thereof (mechanical and electric components, operating fluids etc.) can be detrimental to the environment.

Dispose of such substances in accordance with the relevant local regulations.

Separating the components

After disassembling the product, separate its components according to the following criteria:

Contaminated components

Contaminated components (radioactive, toxic, caustic or biological hazard etc.) must be decontaminated in accordance with the relevant national regulations, separated according to their materials, and disposed of.

Other components

Such components must be separated according to their materials and recycled.

Appendix

A: Measuring Signal vs. Pressure

Conversion formulae

$$p = 10^{1.667U-d} \Leftrightarrow U = c + 0.6\log_{10} p$$

p	U	c	d
[mbar]	[V]	6.8	11.33
[Torr]	[V]	6.875	11.46
[Pa]	[V]	5.6	9.333

where p pressure
U measuring signal
c, d constant (pressure unit dependent

valid in the range 5×10^{-9} mbar < p <1000 mbar
3.8×10^{-9} Torr < p <750 Torr
5×10^{-7} Pa < p <1×10^{5} pa

Conversion curves

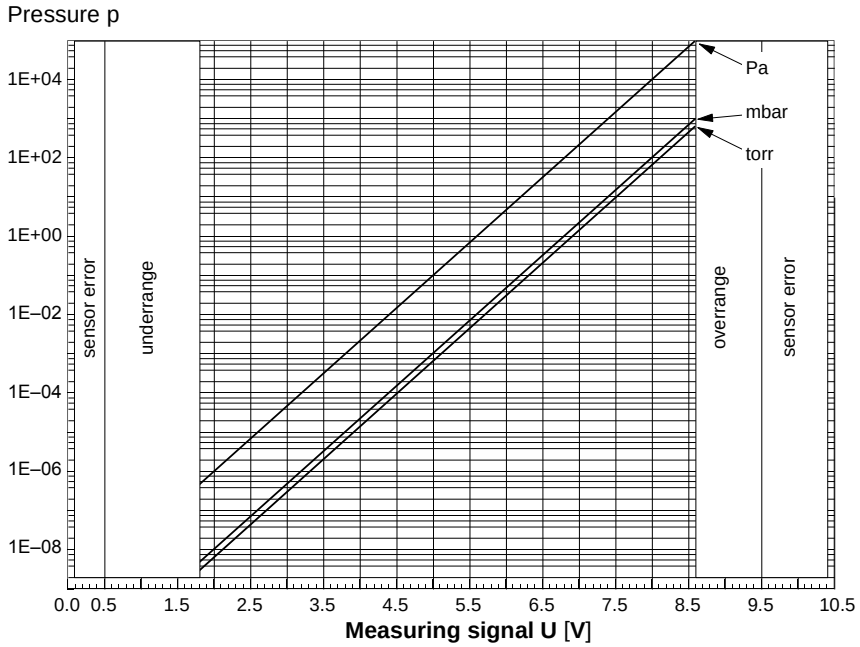

Conversion table

Meas. signal U [V]	Pressure p [mbar]	Pressure p [Torr]	Pressure p [Pa]
<0.5	Sensor error		
0.5 … 1.82	Underrange		
1.82	5.0×10^{-9}	3.8×10^{-9}	5.0×10^{-7}
2.0	1.0×10^{-8}	7.5×10^{-9}	1.0×10^{-6}
2.6	1.0×10^{-7}	7.5×10^{-8}	1.0×10^{-5}
3.2	1.0×10^{-6}	7.5×10^{-7}	1.0×10^{-4}
3.8	1.0×10^{-5}	7.5×10^{-6}	1.0×10^{-3}
4.4	1.0×10^{-4}	7.5×10^{-5}	1.0×10^{-2}
5.0	1.0×10^{-3}	7.5×10^{-4}	0.1
5.6	1.0×10^{-2}	7.5×10^{-3}	1.0
6.2	0.1	7.5×10^{-4}	10
6.8	1.0	0.75	100
7.4	10	7.5	1000
8.0	100	75	1.0×10^{4}
8.6	1000	750	1.0×10^{5}
8.6 … 9.5	Overrange		
9.5 … 10.5	Sensor error (Pirani defective)		

B: Gas Type Dependence

Indication range above 10^{-2} mbar

Pressure indicated (gauge calibrated for air).

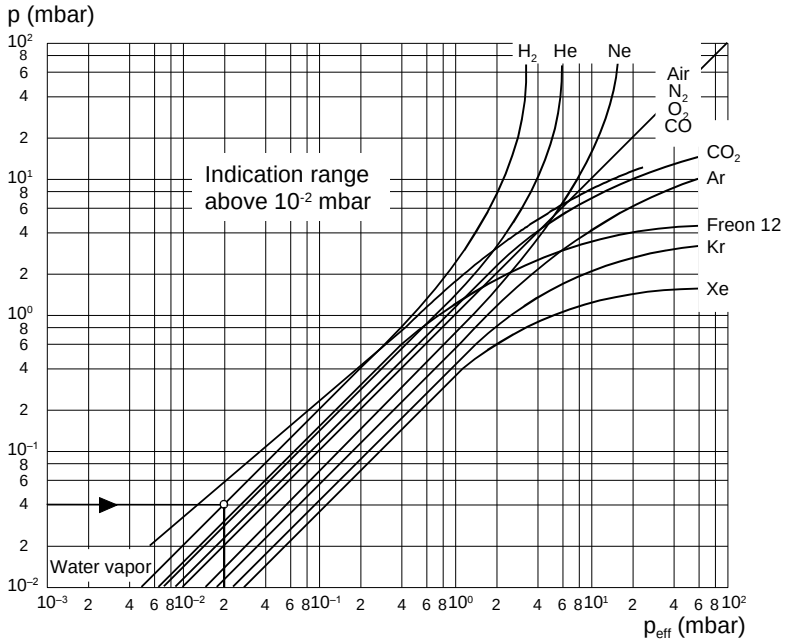

Indication range 10^{-6} … 0.1 mbar

Pressure indicated (gauge calibrated for air).

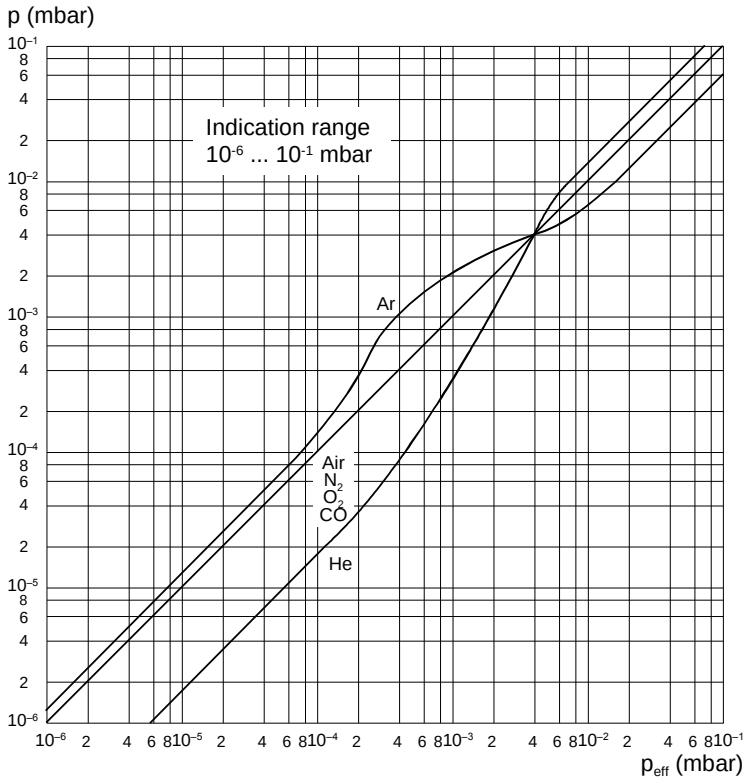

Indication range below 10^{-5} mbar

In the range below 10^{-5} mbar, the pressure indication is linear. For gases other than air, the pressure can be determined by means of a simple conversion formula:

$$p_{eff} = K \times \text{pressure indicated}$$

where

gas type	K
air (O_2, CO, N_2)	1.0
Xe	0.4
Kr	0.5
Ar	0.8
H_2	2.4
Ne	4.1
He	5.9

These conversion factors are average values.

A mixture of gases and vapors is often involved. In this case, accurate determination is only possible with a partial pressure measurement instrument, e.g. a quadrupole mass spectrometer.

Notes

Vacuum Products Division
Instructions for returning products

Dear Customer:

Please follow these instructions whenever one of our products needs to be returned.

1) Complete the attached Request for Return form and send it to Agilent Technologies (see below), taking particular care to identify all products that have pumped or been exposed to any toxic or hazardous materials.

2) After evaluating the information, Agilent Technologies will provide you with a Return Authorization (RA) number via email or fax, as requested.
   Note: Depending on the type of return, a Purchase Order may be required at the time the Request for Return is submitted. We will quote any necessary services (evaluation, repair, special cleaning, eg).

3) Important steps for the shipment of returning product:
   - Remove all accessories from the core product (e.g. inlet screens, vent valves).
   - Prior to shipment, drain any oils or other liquids, purge or flush all gasses, and wipe off any excess residue.
   - If ordering an Advance Exchange product, please use the packaging from the Advance Exchange to return the defective product.
   - Seal the product in a plastic bag, and package product carefully to avoid damage in transit. You are responsible for loss or damage in transit.
   - Agilent Technologies is not responsible for returning customer provided packaging or containers.
   - Clearly label package with RA number. Using the shipping label provided will ensure the proper address and RA number are on the package. Packages shipped to Agilent without a RA clearly written on the outside cannot be accepted and will be returned.

4) Return only products for which the RA was issued.

5) Product being returned under a RA must be received within 15 business days.

6) Ship to the location specified on the printable label, which will be sent, along with the RA number, as soon as we have received all of the required information. Customer is responsible for freight charges on returning product.

7) Return shipments must comply with all applicable Shipping Regulations (IATA, DOT, etc.) and carrier requirements.

RETURN THE COMPLETED REQUEST FOR RETURN FORM TO YOUR NEAREST LOCATION:

EUROPE:	NORTH AMERICA:	PACIFIC RIM:
Fax: 00 39 011 9979 330		
Fax Free: 00 800 345 345 00	Fax: 1 781 860 9252	please visit our website for individual office information
Toll Free: 00 800 234 234 00	Toll Free: 800 882 7426, Option 3	
vpt-customercare@agilent.com	vpl-ra@agilent.com	http://www.agilent.com

Agilent Technologies

Vacuum Products Division
Request for Return Form
(Health and Safety Certification)

Please read important policy information on Page 3 that applies to all returns.

1) CUSTOMER INFORMATION

Company Name:	Contact Name:
Tel: Email:	Fax:
Customer Ship To:	Customer Bill To:
Europe only: VAT reg. Number:	USA/Canada only: ☐ Taxable ☐ Non-taxable

2) PRODUCT IDENTIFICATION

Product Description	Agilent P/N	Agilent S/N	Original Purchasing Reference

3) TYPE OF RETURN (Choose one from each row and supply Purchase Order if requesting a billable service)

3A. ☐ Non-Billable ☐ Billable ➡ New PO # (hard copy must be submitted with this form):

3B. ☐ Exchange ☐ Repair ☐ Upgrade ☐ Consignment/Demo ☐ Calibration ☐ Evaluation ☐ Return for Credit

4) HEALTH and SAFETY CERTIFICATION

AGILENT TECHNOLOGIES CANNOT ACCEPT ANY PRODUCTS CONTAMINATED WITH BIOLOGICAL OR EXPLOSIVE HAZARDS, RADIOACTIVE MATERIAL, OR MERCURY AT ITS FACILITY.
Call Agilent Technologies to discuss alternatives if this requirement presents a problem.

The equipment listed above (check one):

☐ HAS NOT pumped or been exposed to any toxic or hazardous materials. OR

☐ HAS pumped or been exposed to the following toxic or hazardous materials. If this box is checked, the following information must also be filled out. Check boxes for all materials to which product(s) pumped or was exposed:

☐ Toxic ☐ Corrosive ☐ Reactive ☐ Flammable ☐ Explosive ☐ Biological ☐ Radioactive

List all toxic/hazardous materials. Include product name, chemical name, and chemical symbol or formula:

_____

NOTE: If a product is received at Agilent which is contaminated with a toxic or hazardous material that was not disclosed, the customer will be held responsible for all costs incurred to ensure the safe handling of the product, and is liable for any harm or injury to Agilent employees as well as to any third party occurring as a result of exposure to toxic or hazardous materials present in the product.

Print Name: **Authorized Signature:** ..... **Date:**

5) FAILURE INFORMATION:

Failure Mode (REQUIRED FIELD. See next page for suggestions of failure terms):
Detailed Description of Malfunction: (Please provide the error message)
Application (system and model):

I understand and agree to the terms of Section 6, Page 3/3.
Print Name: **Authorized Signature:** ..... **Date:**

Agilent Technologies

Vacuum Products Division
Request for Return Form
(Health and Safety Certification)

Please use these Failure Mode to describe the concern about the product on Page 2.

TURBO PUMPS and TURBO CONTROLLERS

APPARENT DEFECT/MALFUNCTION		POSITION	PARAMETERS	
• Does not start	• Noise	• Vertical	Power:	Rotational Speed:
• Does not spin freely	• Vibrations	-Horizontal	Current:	Inlet Pressure:
• Does not reach full speed	-Leak	-Upside-down	Temp 1:	Foreline Pressure:
• Mechanical Contact	-Overtemperature	-Other:	Temp 2:	Purge flow:
• Cooling defective	-Clogging	_____	OPERATING TIME:	

ION PUMPS/CONTROLLERS

• Bad feedthrough	• Poor vacuum
• Vacuum leak	• High voltage problem
• Error code on display	• Other

VALVES/COMPONENTS

• Main seal leak	• Bellows leak
• Solenoid failure	• Damaged flange
• Damaged sealing area	-Other

LEAK DETECTORS

• Cannot calibrate	-No zero/high backround
• Vacuum system unstable	• Cannot reach test mode
• Failed to start	• Other

INSTRUMENTS

• Gauge tube not working	• Display problem
• Communication failure	• Degas not working
• Error code on display	• Other

SCROLL AND ROTARY VANE PUMPS

• Pump doesn't start	• Noisy pump (describe)
• Doesn't reach vacuum	• Over temperature
• Pump seized	• Other

DIFFUSION PUMPS

• Heater failure	• Electrical problem
• Doesn't reach vacuum	• Cooling coil damage
• Vacuum leak	• Other

Section 6) *ADDITIONAL TERMS*

Please read the terms and conditions below as they apply to all returns and are in addition to the Agilent Technologies Vacuum Product Division – Products and Services Terms of Sale.

- Customer is responsible for the freight charges for the returning product. Return shipments must comply with all applicable Shipping Regulations (IATA, DOT, etc.) and carrier requirements.
- Customers receiving an Advance Exchange product agree to return the defective, rebuildable part to Agilent Technologies within 15 business days. Failure to do so, or returning a non-rebuildable part (crashed), will result in an invoice for the non-returned/non-rebuildable part.
- Returns for credit toward the purchase of new or refurbished Products are subject to prior Agilent approval and may incur a restocking fee. Please reference the original purchase order number.
- Units returned for evaluation will be evaluated, and a quote for repair will be issued. If you choose to have the unit repaired, the cost of the evaluation will be deducted from the final repair pricing. A Purchase Order for the final repair price should be issued within 3 weeks of quotation date. Units without a Purchase Order for repair will be returned to the customer, and the evaluation fee will be invoiced.
- A Special Cleaning fee will apply to all exposed products per Section 4 of this document.
- If requesting a calibration service, units must be functionally capable of being calibrated.

Service & Support

North America
Agilent Technologies
121 Hartwell Avenue
Lexington, MA 02421 USA
Tel.: +1 781 861 7200
Toll-Free: +1 800 882 7426
Fax: +1 781 860 5437
vpl-customerservice@agilent.com

Benelux
Agilent Technologies Netherlands B.V.
Herculesweg 8
4338 PL Middelburg The Netherlands
Tel: +31 118 671570
Fax: +31 118 671569
Toll free: 00 800 234 234 00

China
Agilent Technologies (China) Co. Ltd
No.3, Wang Jing Bei Lu,
Chao Yang District, Beijing,
100102 China Tel.: +86
(10) 6439 7888
Fax: +86 (10) 6439 1318
Toll-Free: 800 820 8266
vpc-customerservice@agilent.com

France
Agilent Technologies France
7 avenue des Tropiques
Z.A. de Courtaboeuf – B.P. 12
91941 Les Ulis cedex France
Tel.: +33 (0) 1 69 86 38 84
Fax: +33 (0) 1 69 86 29 88
Toll free: 00 800 234 234 00
vpf.sales@agilent.com

Germany & Austria
Agilent Technologies
Lyoner Str. 20
60 528 Frankfurt am Main Germany
Tel.: +49 69 6773 43 2230
Fax: +49 69 6773 43 2250
Toll free: 00 800 234 234 00

India
Agilent Technologies India Pvt. Ltd.
G01. Prime corporate Park,
230/231, Sahar Road,
Opp. Blue Dart Centre,
Andheri (East), Mumbai – 400 099 India
Tel: +91 22 30648287/8200
Fax: +91 22 30648250
Toll Free: 1800 113037
cag_india@agilent.com

Italy
Agilent Technologies Italia S.p.A.
via F.lli Varian 54
10040 Leini, (Torino) Italy
Tel.: +39 011 997 9111
Fax: +39 011 997 9350
Toll-Free: 00 800 234 234 00
vpt.sales@agilent.com
vpt-customerservice@agilent.com

Japan
Agilent Technologies Japan, Ltd.
8th Floor
Sumitomo Shibaura Building
4-16-36 Shibaura Minato-ku
Tokyo 108-0023 Japan
Tel.: +81 3 5232 1253
Toll-Free: 0120 655 040
Fax: +81 3 5232 1710
vpj-customerservice@agilent.com

Korea
Agilent Technologies Korea Ltd.
Shinsa 2nd Bldg. 2F
966-5 Daechi-dong
Kangnam-gu, Seoul Korea 135-280
Tel.: +82 2 3452 2455
Toll-Free: 080 222 2452
Fax: +82 2 3452 2451
vpk-customerservice@agilent.com

Singapore
Agilent Technologies Singapore Pte Ltd
No.1 Yishun Avenue 7 Singapore 768923
Tel: +65 6215 8045
Fax : +65 6754 0574
Toll-Free: 1 800 2762622
vps-customerservice@agilent.com

South East Asia
Agilent Technologies Sales Sdn Bhd
Unit 201, Level 2 uptown 2,
2 Jalan SS21/37, Damansara Uptown
47400 Petaling Jaya, Selangor, Malaysia
Tel : +603 7712 6106
Fax: +603 6733 8121
Toll-Free: 1 800 880 805
vps-customerservice@agilent.com

Taiwan
Agilent Technologies Taiwan Limited
20 Kao-Shuang Rd.,
Pin-Chen City, 324
Taoyuan Hsien, Taiwan, R.O.C.
Tel. +886 34959281
Toll Free: 0800 051 342
vpw-customerservice@agilent.com

UK & Ireland
Agilent Technologies UK Ltd
6 Mead Road
Oxford Industrial Park
Yarnton, Oxford OX5 1QU UK
Tel.: +44 (0) 1865 291570
Fax: +44 (0) 1865 291571
Toll free: 00 800 234 234 00
vpt-customerservice@agilent.com

08/2012 BRxxx

Learn more:
www.agilent.com/chem/vacuum

This information is subject to change without notice.

© Agilent Technologies, Inc., 2011

Published in USA, October, 2011

Agilent Technologies